CRYOTEC Anlagenbau GmbH

WURZEN

Challenges of cryogenics for effective separation and liquefaction of CO_2 and methane from biogas

EPC GROUP

TRADITION IN PLANT CONSTRUCTION SINCE 1880

SPECIALISTS IN TECHNICAL GASES

PLANT CONSTRUCTION

MODULAR SYSTEMS

AFTER SALES SERVICES

CRYOTEC Anlagenbau GmbH is situated in Wurzen, Saxony.
The company was established in 1995 as a successor company of the MAFA Wurzen.
Since 2009 it is a part of the **EPC Group**.

Introduction

The aim of this presentation is a description of the main criteria required for the development and processing of the Bio-LNG and CO_2 technology from the landfill gas of a small farm (cattle, chicken, pig, or different compost sources) with a wide range of production capacity of raw biomaterial and different kind of flue gas cleaning system as well.

The presentation gathers the following:

- main factors required and to be considered for the biogas development;
- main factors for the CO_2 recovery from flue gas of toxic harmful compounds;
- simplified technological process description;
- a type of used equipment for the process development.

BIO-CH_4 recovery from landfill gas

Landfill average gas composition

The composition of biogas varies depending upon the origin of the anaerobic digestion process. Landfill gas typically has methane concentrations around 50...75% and carbon dioxide is a substance whose composition in landfill gas is also very significant and can vary from 25% to 50%.
The typical average biogas composition is given in the Table below.

Substance	Concentration vol.%
Methane (CH_4)	40-75
Carbon dioxide (CO_2)	25-55
Hydrogen sulphide (H_2S)	50-5000ppm
Ammonia (NH_3)	0-1
Water (H_2O)	0-10
Nitrogen (N_2)	0-5
Oxygen (O_2)	0-2
Hydrogen (H_2)	0-1

As can be seen from the table, the composition of landfill gas is a complex gas mixture and the methane extraction will require several stages of processing, which will be different and depend on the end-user quality requirements for bio-methane.

Factors affecting the landfill gas and system design

Animal genus
- Cattle
- Livestock
- Poultry

Gender of the animal
- Animal age
- Season
- Physical condition (pregnancy)

Food and Habitat
- Type / type of food
- The presence of enzymes
- Animal habitat (barracks, outdoor)

Compost
- Number of animals
- Type of gas storage
- Are additional enzymes added to the compost
- Type of biomaterials in compost other than animal origin.

Landfill gas
- Composition
- The presence of toxic impurities (ammonia, hydrogen sulfide, etc.)
- Purpose of using biomethane (delivered to the grid/domestic heating, etc.)

Biogas solutions - functionality of a biogas plant

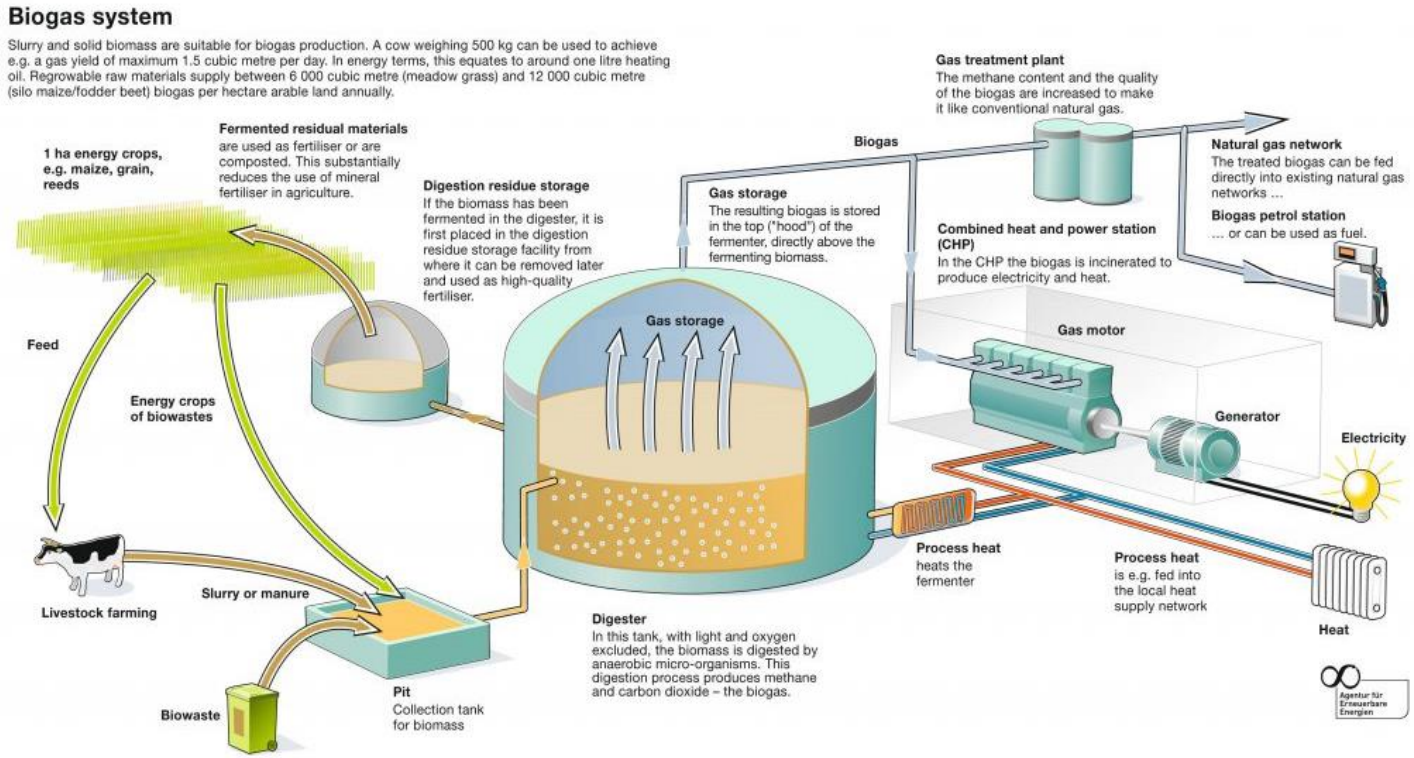

Average output indicators of biogas plant

Raw Material Type	Cattle, dairy herd	Pigs	Chickens	Slaughterhouse waste	Beet pulp
Livestock, pcs.	11 500	50 000	580 000	--	--
Average output of organic waste from one head, kg/day	35	6	0.20	--	--
Humidity of organic waste, %	88	88	75	90	75
Output of organic waste, t/day	402	300	116	30	145
Biogas output, m^3/day	14 490	14 400	14 500	15 000	14 500
Methane average content, vol. %	55	58	62	63	54

Technological process of CH_4 extraction from landfill gas

The simplified most common technological process of CH_4 extraction from landfill gas

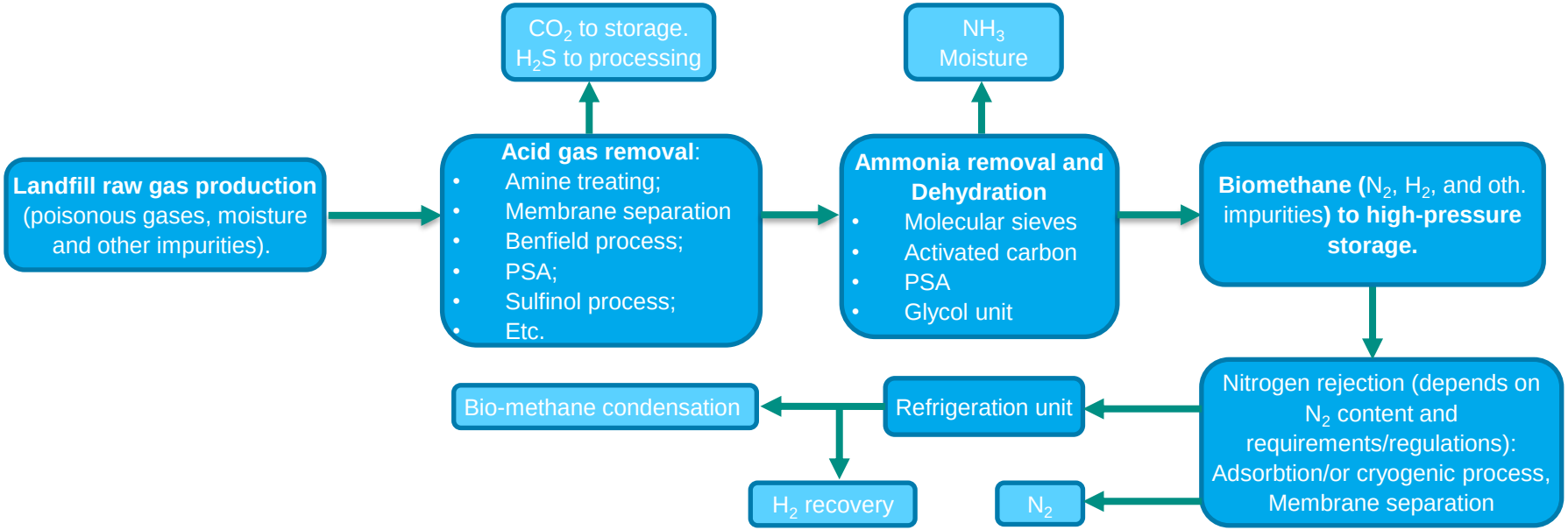

The figure shows the complete most common process chain for the extraction of methane (and, if necessary, hydrogen) from natural gas. Depending on the requirements of the customer, the size of the bio storage, and other factors, this process chain can be changed.

Technological process notes

Stage 1. Acid, gas removal. The toxicity of hydrogen sulfide and ammonia is very high thus, these gases should be removed at the beginning of the Bio-CH_4 recovery process.

Stage 2. Ammonia removal and dehydration. For removing ammonia from biogas the adsorption or bio-filtration process can be used. To get rid of moisture the feed flow should be dried.

Stage 3. Nitrogen and CO_2 Rejection. At this stage, various methods of purification of biomethane from carbon dioxide and nitrogen can be used. Depending on the requirements for the purity of biomethane at the outlet of the plant, both single-stage membrane technologies and more complex PSA technologies and multi-stage membrane separation can be used. This stage needs to be discussed in detail at the first stage of the project.

Step 4. Compressing of the Bio-methane in to the high pressure storage or liquefaction of Bio-methane.

Cryotec practically proven technology for Bio-CH_4 recovery

The proven technological chain for recovery of the bio methane consists of 4 main stages:

- **Gas sweeting**
- **Ammonia removal and dehydration**
- **Nitrogen and CO_2 Rejection**
- **Liquefaction of Methane**

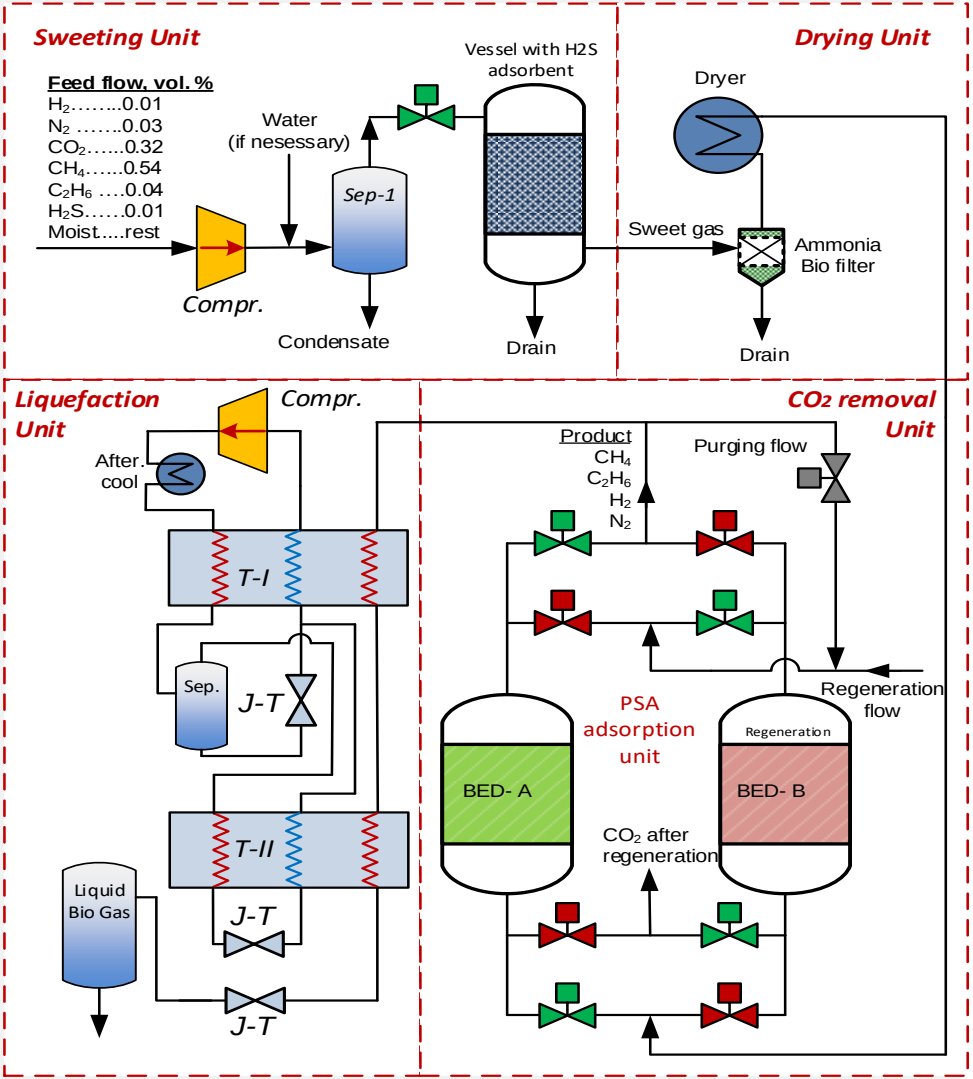

Small scale Bio-CH4 recovery process

Note: The composition of the biomethane is different in each gas field. To prepare the real technological change for the recovery of the methane from the biomethane field a detailed gas composition should be provided in advance. The process shown in the picture is not detailed and is given only as an example. The real technological chain will differ from that one which is shown in picture.

Bio-CH_4 liquefaction process (conceptual design)

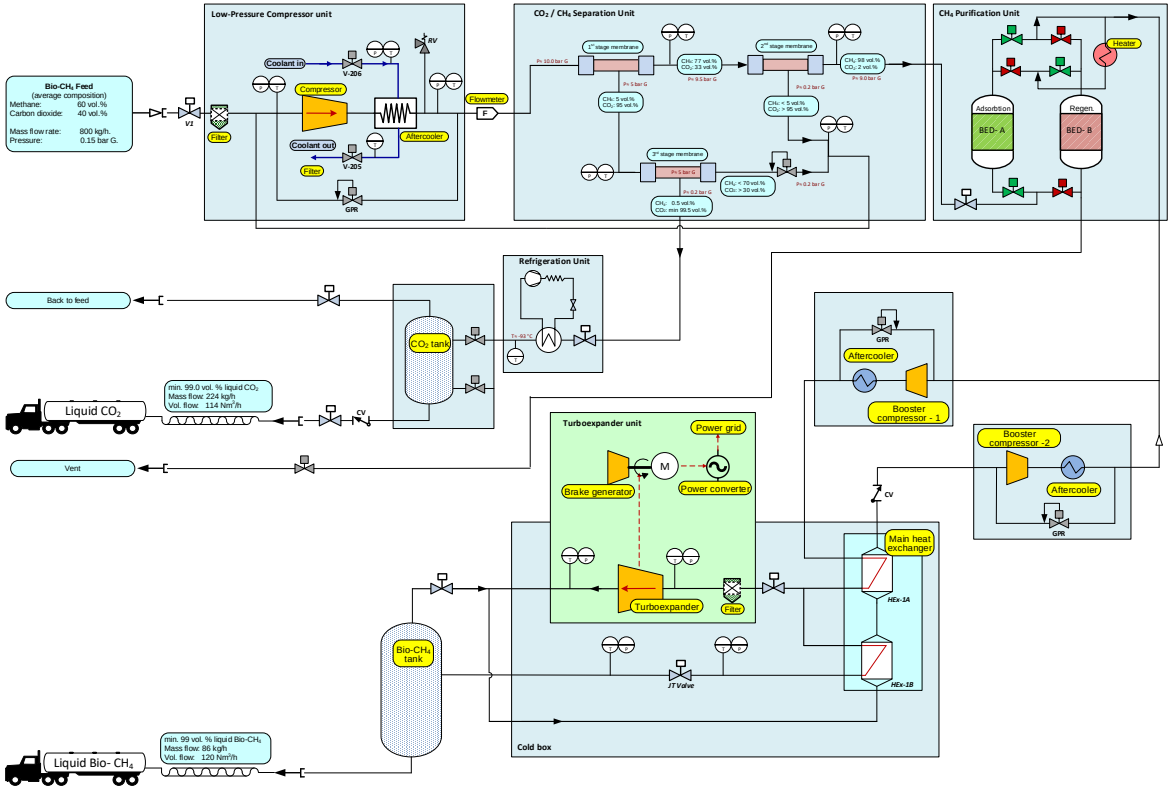

The technological scheme of the biomethane liquefaction realizes the Bell-Colleam cryogenic cycle using a gas turboexpander with an electrical power generator brake and power converter.

The concept is based on the partial liquefaction of methane from the circulation flow from the refrigeration process.

GAS

CO_2 recovery from the flue gas of toxic harmful compounds

Composition of the flue gas of toxic harmful compounds

As an example, the composition of the flue gas flow generated by the electric station of 200 MW (nominal load)/220 MW (peak load) operating with brown coal, using the turbine of high and low pressure and without the vapor flow preheating is presented in table below.

Flue gas component	Value	Concentration
Nitrogen (N_2)	vol%	67.0
Carbon Dioxide (CO_2)	vol%	11.8
Oxygen (O_2)	vol%	12.0
Water (H_2O)	vol%	8.0
Carbon Monoxide (CO)	ppm	300
Sulphur Dioxide (SO_2)	ppm	180
Nitrogen Oxides (NO_x)	ppm	150
Combustion products: soot, dust, etc.	vol%	rest
Average Duct Temperature	°C	85
Pressure	Atm	1.0
CO_2 release	tons/day	10.300

Simplified technological process of flue gas purification

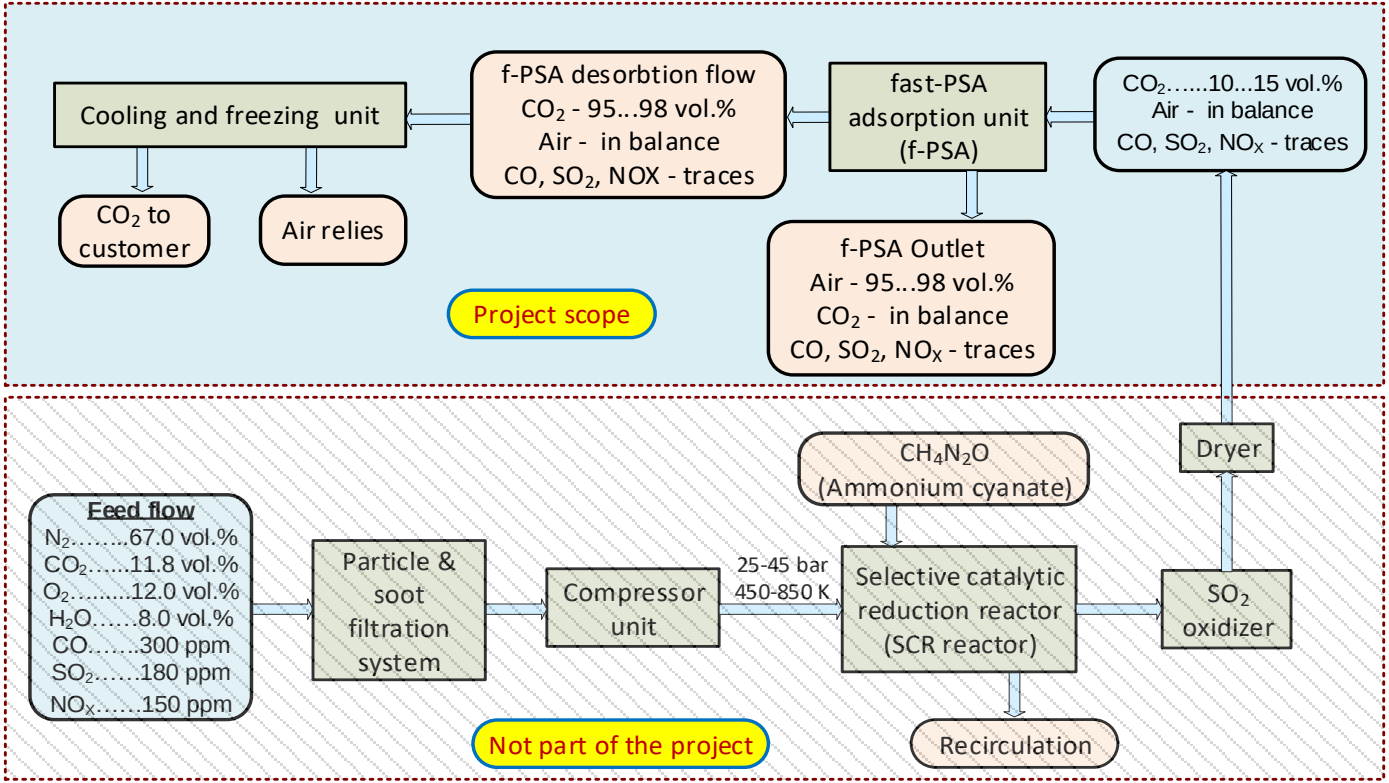

Technological process notes

As it can be seen from the process flow diagram from the previous slide the schematics of flue gas technological purification from CO_2 can be divided into 2 main blocks.

Block 1. SCR, oxidizer & drying unit is comprised of Particle & Soot filtration system, Compressor unit, Selective catalytic reduction reactor (SCR reactor), SO_2 oxidizer and Dryer.

Block 2. f-PSA adsorption unit combined with Cooling and freezing unit. f-PSA adsorption unit made up of two BED-A and BED-B – pressure swing adsorbers; Cooling and freezing unit includes HEX-A, HEX-B – recuperative heat exchangers, T-I – cooling unit heat exchangers, AF – aftercooler.

Cryotec practically proven technology for flue gases recovery

The proven technological chain for recovery of the bio methane consists of 4 main stages:

- **SO_2, NO_X, CO compounds removal and dehydration;**
- ***NO_X* compounds removal;**
- ***SO_2* compounds removal;**
- **Pure N_2 and O_2 preparation while adsorbing and freezing up of *CO_2***
  - Swing pressure adsorption (SPA) system
  - Low-temperature refrigerating machine and CO_2 freezing unit

Technological process of SCR, oxidizer & drying unit

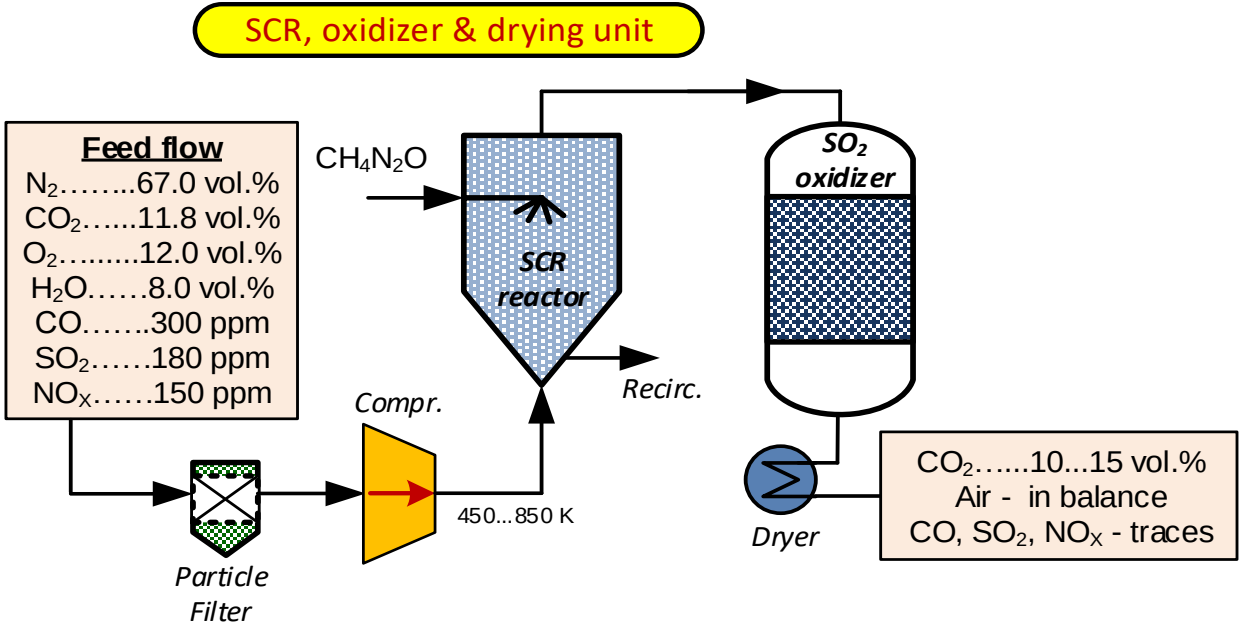

SO_2, NOX, CO compounds removal and dehydration.

The subsystem designed for SO2, NOX, CO compounds removal and consequent dehydration of the gas flow.

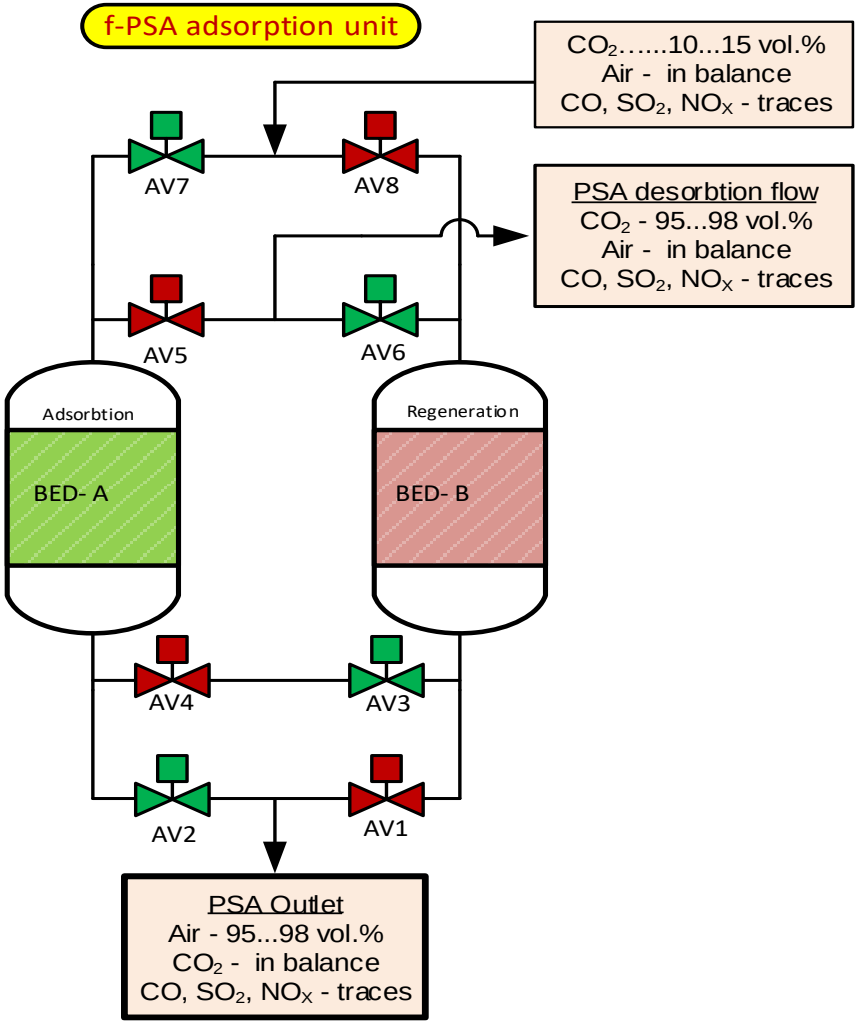

The fast - pressure swing adsorption (f-SPA) system

The f-PSA method is a widely used physical process for separating gas mixtures using selective adsorption under pressure. The incoming gas flow is compressed and passed through a volume filled with suitable adsorbents, in which mainly the impurities are adsorbed.

Low-temperature refrigerating machine and CO_2 freezing unit

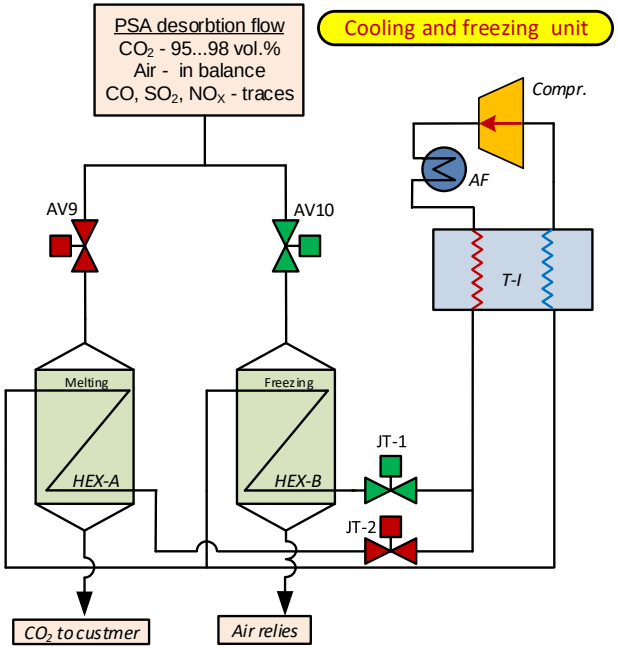

The mixed refrigerant Linde-Hampson low-temperature refrigerating machine operates with 2 low-temperature heat exchangers-freezers HEX-A and HEX-B alternatively. While desorbing (regenerating) of one of the adsorbers the flow of releasing CO_2 is headed into the currently ac-tive (operating) HEX-B where is frozen and trapped in its solid state.

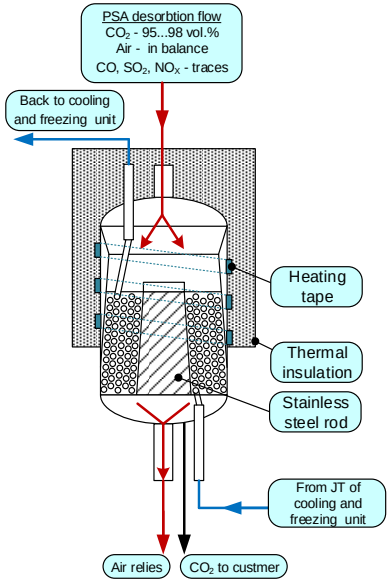

Simplified sketch of the condenser-freezer and its flow distribution for use in the low-temperature refrigeration unit

The biomethane market and the main problems of extracting biomethane from feedstocks

Biomethane market

Only in Germany, there are about 9500 landfill plants for the extraction of Biomethane

Approximately 200 plants produce Biomethane and pump it into the gas network grid

Other plants liquefy Biomethane and deliver it to gas stations for filling the automotive.

However, there are a huge number of livestock farms that cannot process compost and produce biomethane.

Main problems of biomethane production

The main problem faced by farming is the inability to ensure the minimum mass consumption of raw materials for the extraction of Biomethane from compost.

At the moment, there are restrictions on the development of biomethane at the level of about 350 kg/h.

Those. if the farm cannot provide this flow of raw materials, then companies producing equipment and plants for liquefying methane, in most cases, will refuse to develop a plant for extracting and liquefying methane.

State of the Art and lack of equipment

The most critical part in the development of methane recovery and liquefaction plants is the low-temperature cryogenic biomethane liquefaction plant.
Almost all developers follow the simplest principle of organizing a cryogenic cycle. Typically, two options are used.

Option 1. Use of liquid nitrogen to liquefy methane.
This option is inappropriate for farms, as additional infrastructure is required to provide the plant with liquid nitrogen. This significantly affects capital costs and complicates the use of the plant. This leads to unprofitability.

Option 2. Use of a classical cryogenic nitrogen cycle with a turbo-expander for cooling and subsequent liquefaction of biomethane.
The absence of the required turbo-expanders for the nitrogen cycle on the market does not allow the creation of a biomethane liquefaction plant with a capacity below 350 kg/h.
Also, the cost of only the main equipment (excluding development, design, etc.) to create a small plant with a capacity of about 350 kg/h is more than 1 M€. As a rule, this amount is unbearable for the farm.

Is there a way?

More perfect cryogenic cycle. Is it a myth or reality?

Our company conducts continuous research and development of cryogenic cycles aimed at increasing the degree of thermodynamic perfection of the cryogenic cycle.

For example, the following cryogenic cycles can become an alternative to the current ones:

Mixed refrigeration machine implementing the Linde-Hampson cycle (for small-scale liquefaction plants up to 100kg/h).

Cryogenic plant for direct liquefaction with the partial withdrawal of liquid to the consumer implemented according to the Bell-Coleman cycle (an open-type medium-pressure cryogenic cycle with partial liquefaction of the refrigerant flow).

Turboexpander requirements

The most critical parameter for the required turboexpanders in the small-scale BIo CH_4 projects is mass flow.

Usually, the required mass flow should start from several hundred kg/h of the feed flow which correspond to about:
3 – 5 kW of cooling power @ -150°C (depending on the project scale).

The second critical part is the additional equipment for the turboexpander such as:

- **Power generator brake**
- **Electrical power converter**
- **Electrical grig connection interface.**

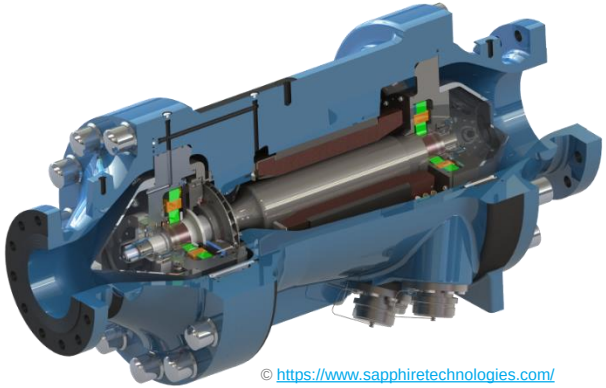

© https://www.sapphiretechnologies.com/

Using of alternative equipment

For example, modified turbo-expander units, which are used in a slightly different area of cryogenic technology in the production of liquid helium, hydrogen, or low-temperature cryostating.

Cryotec Anlagenbau is already negotiating with manufacturers of such equipment.

The developed low-flow turbo-expanders will have a cooling capacity in the range from 8 to 100 kW and will be equipped with an electric brake generator andpower converters, which will allow the generated electricity to be returned to the grid or used for additional equipment even at low unit capacities.

Some photos of the proven technology

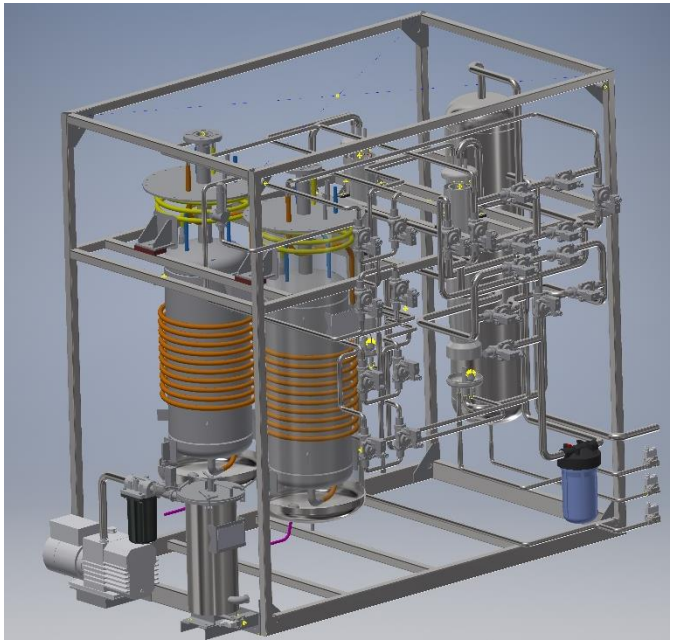

Dryer and PSA adsorbtion unit

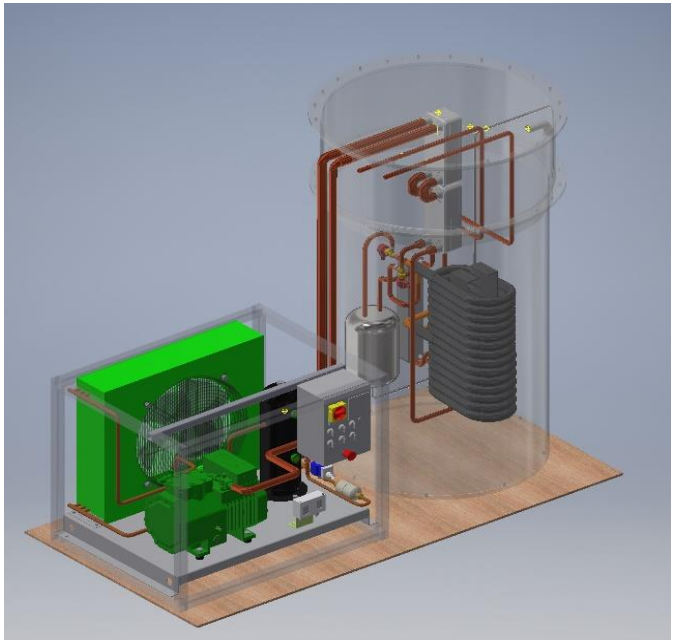

CAD view on the CH_4 liquefaction unit
(liquefaction capacity up to 50 kg/h of CH_4)

CYCLES COMPARISION

Type of refrigeration cycle:	Specific costs kW / kg of liquid Bio-CH_4 (thermodynamic calculation)
Direct natural gas liquefaction (circulation of the natural gas for cold production in a closed loop with partial liquefaction and removing the liquid component from the refrigeration loop).	0.65…0.67
Nitrogen refrigeration cycle for liquefaction of Bio-CH_4	0.7…0.75

Conclusion

1. Despite a large number of farms, the biomaterial/compost is often not processed, but simply thrown away.
2. The use of modern technologies for the collection, storage, and processing of biomaterials will help to extract from compost and use tens of thousands of m^3 of biomethane per year.
3. The collected biomethane can be used for heating houses, while its concentration can be only about 40-50 vol. %.
4. If necessary, biomethane can be purified to the required product quality and used for refueling vehicles or directly supplying it to the gas network.
5. This technology can cover both small farms with a number of cattle from a few dozen, and large farms with hundreds or thousands of heads.
6. To introduce this technology to the market, a more detailed analysis of farms in the EU is needed.

CONTACT US

T +49 3425 89 65 - 1610
E sales@cryotec.de
W www.cryotec.de

CRYOTEC Anlagenbau GmbH

Dresdener Straße 76
04808 Wurzen
Germany

CRYOTEC Anlagenbau GmbH is certified per DIN EN ISO 9001

IDEAS INSIDE

THANK YOU FOR YOUR ATTENTION